Scheme I. Interconversions of the *N*-Alkylporphyrin and Its Iron Complexes[a]

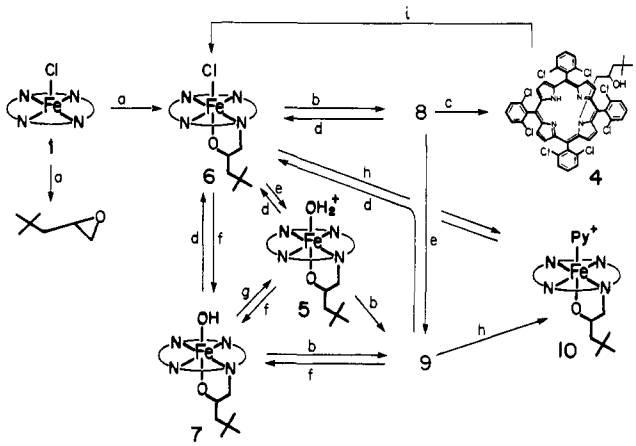

[a] (a) 4,4-Dimethyl-1-pentene, C_6F_5IO/CH_2Cl_2; (b) C_6F_5IO/CH_2Cl_2; (c) concentrated HCl/AcOH; (d) 1% aqueous HCl/CH_2Cl_2; (e) H_2O/CH_2Cl_2; (f) aqueous $NaHCO_3/CH_2Cl_2$; (g) $AcOH/CH_2Cl_2$; (h) pyridine/CH_2Cl_2; (i) $FeCl_2$/THF.

was treated with **2**. All of the species shown in Scheme I were interconvertible, though gradual decomposition of **8** and **9** was observed spectroscopically. These observations suggest that **8** and **9** may be the [chloro(pentafluorophenyl)iodoxo]iron(III) and the [hydroxo(pentafluorophenyl)iodoxo]iron(III) complexes.[9] The ferric oxidation state in **8** and **9** is supported by their rhombic ESR spectra (g = 8.57, 5.35, 2.05, CH_2Cl_2, −196 °C), which change to those of typical low-spin ferric complexes (g = 2.38, 2.14, 1.94) on the addition of pyridine.[10]

In most respects hemins and iodosobenzene mimic the hydroxylations and epoxidations catalyzed by the cytochromes P-450.[11] The additional parallels reported here, where an in vitro system mimics the suicide inhibitors characteristic of microsomal P-450, add further support to the validity of using the chemical to model the enzymic systems.

Acknowledgment. This work was supported by the NIH (GM 29198) and the NSF (CHE 81-20969).

Registry No. 1, 91042-27-2; **2**, 827-15-6; **3**, 762-62-9; **4**, 96326-84-0; **5**, 96326-85-1; **6**, 96326-86-2; **7**, 96326-87-3; **8**, 96326-88-4; **9**, 96326-89-5; **10**, 96326-90-8; cytochrome P-450, 9035-51-2.

(8) We tentatively assigned the hydroxide structure **7** for the species generated by this treatment (Scheme I): UV λ_{max} (CH_2Cl_2) 361, 444, 570, 585, 640 nm.

(9) The reversible formation of **8** and **9** from **6** and **5**, coupled with the ESR results, suggests the structures shown. The coordination of iodosobenzene to manganese(IV) porphyrins in the chloro-, acyloxy-, and alkoxy(phenyl)iodoxo forms has been reported. Smegal, J. A.; Hill, C. L. *J. Am. Chem. Soc.* **1983**, *105*, 2920. Smegal, J. A.; Schardt, B. C.; Hill, C. L. *J. Am. Chem. Soc.* **1983**, *105*, 3510. Birchall, T.; Smegal, J. A.; Hill, C. L. *Inorg. Chem.* **1984**, *23*, 1910. The iodosopentafluorobenzene (**2**) is essential for the conversion of **6** and **5** (or **7**) to **8** and **9**. Neither *m*-chloroperbenzoic acid nor *tert*-butyl hydroperoxide gave any **8** or **9**.

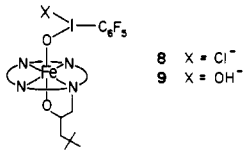

8 X = Cl^-
9 X = OH^-

(10) The structure assigned to **10** is most likely for the species formed in the presence of excess pyridine (Scheme I). UV λ_{max} (CH_2Cl_2–1 drop of pyridine) 432, 585 (sh), 618 (sh) nm. The *N*-alkyl group prevents coordination on both sides of the metal, a similar reaction, $[Fe^{III}(N\text{-MeOEP})Cl]^+$ + pyridine ⇄ $[Fe^{III}(N\text{-MeOEP})py]^{2+}$ + Cl^- (K ~ 1.66 (where OEP = octaethylporphyrin), has been previously reported: Ogoshi, H.; Kitamura, S.; Toi, H.; Aoyama, Y. *Chem. Lett.* **1982**, 495.

(11) Groves, J. T.; Nemo, T. E. *J. Am. Chem. Soc.* **1983**, *105*, 5786 and references therein.

Formation of an Iron(IV)–Oxo "Picket-Fence" Porphyrin Derivative via Reduction of the Ferrous Dioxygen Adduct and Reaction with Carbon Dioxide

M. Schappacher and R. Weiss*

Institut Le Bel,[1] Université Louis Pasteur 67070 Strasbourg Cedex, France

R. Montiel-Montoya and A. Trautwein

Physik, Medizinische Hochschule, 24 Lübeck 1, BRD

A. Tabard

Faculté des Sciences "Gabriel"[2] Université de Dijon, 21100 Dijon, France

Received December 12, 1984

The catalytic cycle of cytochrome P 450 involves the binding of molecular oxygen to the ferrous heme protein and the conversion of this dioxygen adduct to a high-valent iron–oxo heme derivative with two oxidation equivalents above iron(III).[3-5] Synthetic metalloporphyrin–dioxygen complexes have been obtained which model the spectroscopic properties of the oxy states of P 450 and cobalt-substituted P 450_{CAM}.[6-9] The conversion of such complexes into reactive high-valent iron–oxo species has so far not been achieved. However, acylation of a manganese(III)–peroxo system by acid chlorides has been described by Groves et al.[10] and formation of an iron(IV)–oxo–porphyrin radical cation by reaction with acid chlorides and acid anhydrides was reported by Khenkin et al.[11] In this paper, we show that the peroxo–iron(III)–porphyrin derivatives which can be obtained by chemical reduction of ferrous–porphyrin–dioxygen adducts are converted into iron(IV)–oxo–porphyrin derivatives by reaction with carbon dioxide.

Reaction of the known $(THF)_2$–iron(II)–tetrakis(pivaloylphenyl)porphyrin derivative, $[Fe(THF)_2TP(piv)P]$[12] with O_2 at −40 °C in dry degassed THF resulted in the formation of the ferrous dioxygen adduct $[Fe(O_2)(THF)TP(piv)P]$[13] (**1**). The visible spectrum of **1** showed bands at 419 and 538 nm. Treatment of **1**, after purging the solution under vacuum at −40 °C in order to remove noncoordinated dioxygen, with a 1 to 1 equiv THF solution of sodium bis(2-methoxyethoxy)aluminum hydride (Redal) yielded species **2** having a visible spectrum with bands at 438, 563, and 604 nm (Figure 1) and EPR spectral properties ($g \simeq$ 2, 4.2, 8) very close to those known for the peroxo–iron(III) porphyrin derivatives.[14-16] These results indicated the formation

(1) Laboratoire de Cristallochimie et de Chimie Structurale associé au C.N.R.S. (E.R.A. 08).

(2) Laboratoire de Synthèse et d'Electrosynthèse Organométalliques associé au C.N.R.S. (L.A. 33).

(3) Gunsalus, I. C.; Sligar, S. G. *Adv. Enzymol. Relat. Areas Mol. Biol.* **1978**, *47*, 1–44.

(4) Ullrich, V. *Top. Curr. Chem.* **1979**, *83*, 67–104.

(5) White, R. E.; Coon, M. J. *Am. Rev. Biochem.* **1980**, *49*, 315–356.

(6) Schappacher, M.; Ricard, L.; Weiss, R.; Montiel-Montoya, R.; Bill, E.; Gonser, U.; Trautwein, A. *J. Am. Chem. Soc.* **1981**, *103*, 7646–7647.

(7) Ricard, L.; Schappacher, M.; Weiss, R.; Montiel-Montoya, R.; Bill, E.; Gonser, U.; Trautwein, A. *Nouv. J. Chim.* **1983**, *7*, 405–406.

(8) Schappacher, M.; Ricard, L.; Weiss, R.; Montiel-Montoya, R.; Gonser, U.; Bill, E.; Trautwein, A. *Inorg. Chim. Acta* **1983**, *78*, L9–L12.

(9) Doppelt, P.; Weiss, R. *Nouv. J. Chim.* **1983**, *7*, 341–343.

(10) Groves, J. T.; Watanabe, Y.; McMurray, T. S. *J. Am. Chem. Soc.* **1983**, *105*, 4489–4490.

(11) Khenkin, A. M.; Shtejnman, A. A. *J. Chem. Soc., Chem. Commun.* **1984**, 1219–1220.

(12) $Fe(THF)_2TP(piv)P$ was prepared by zinc-amalgam reduction of $[Fe(Br)TP(piv)P]$ in THF. See also: Collman, J. P.; Gagne, R. R.; Reed, C. A.; Halbert, T. R.; Lang, G.; Robinson, W. T. *J. Am. Chem. Soc.* **1975**, *97*, 1427–1439.

(13) $[Fe(THF)_2TP(piv)P]$ absorbs O_2 in the solid state to form $[Fe(O_2)(THF)_2TP(piv)P]$; see ref 12.

0002-7863/85/1507-3736$01.50/0 © 1985 American Chemical Society

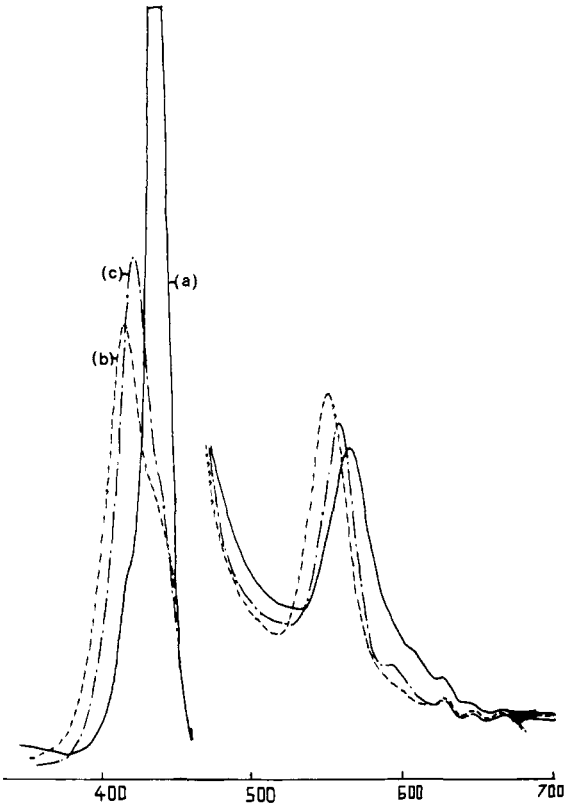

Figure 1. Visible absorption spectra: (a) **2** in THF at −40 °C, (b) **3** in THF at −70 °C, (c) **4** in THF/1-MeIm at −70 °C.

of the peroxo–iron(III)–picket fence porphyrinate, [FeOOTP(piv)P]$^-$ [17] (**2**). Reaction of solutions of **2**[18] at −70 °C with an excess of carbon dioxide[19] caused the immediate production of a bright red species **3** displaying a visible spectrum with bands at 419 and 550 nm (Figure 1). The oxidation of [Fe^{III}ClTP(piv)P] with potassium peroxycarbonates prepared by reaction in THF of carbon dioxide with 18-crown-6 potassium superoxide[20] also produced **3**. The 400-MHz ^{1}H NMR spectrum of **3** in deuterated THF at −50 °C showed resonances at δ 12.86 s (ortho H), 9.3, 8.7, 7.7 (meta H, para H), 7.45 (NH), 7.2 (pyr H), and −0.25 s (piv H).[21] The assignments were made by comparison with previous work on iron(IV) species.[22] The EPR spectrum of **3** showed only a weak signal due to a high spin impurity. The Mössbauer spectrum of ^{57}Fe **3** taken at 4.2 K showed parameters, δ (relative to α-Fe at room temperature) 0.120, ΔE_Q = 2.200, and

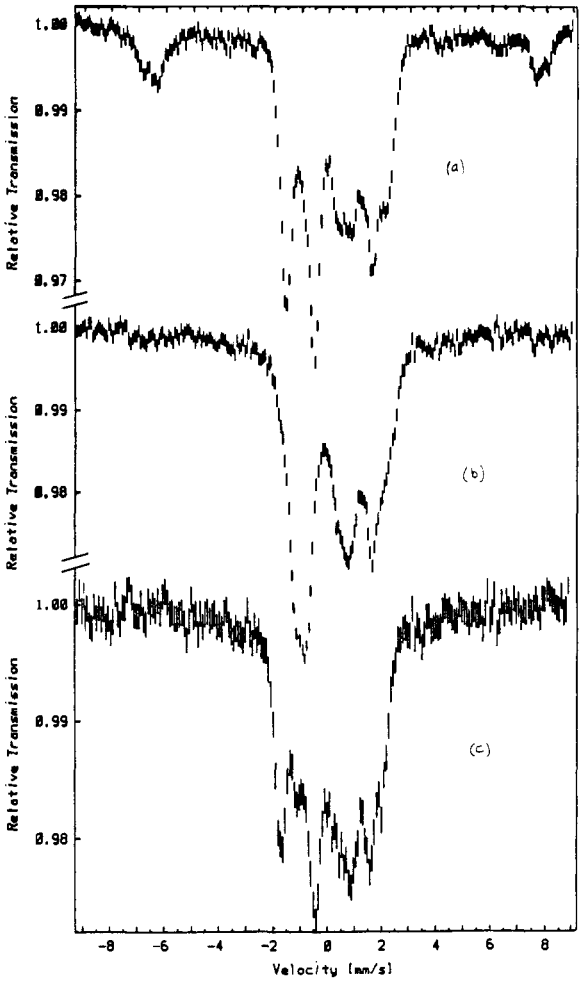

Figure 2. Experimental Mössbauer spectra of ^{57}Fe **3** recorded at (a) 4.2, (b) 30, and (c) 100 K; in all cases, $H_{\parallel}^{ext}$ = 6.7 T parallel to the γ beam. The absorption peaks at ca. ±7 mm s^{-1} are due to an Fe^{III} high-spin impurity (ca. 15%).

Γ = 0.414 (±0.007) mm s^{-1}. Magnetic Mössbauer spectra (H^{ext} = 6.7 T parallel to the γ beam) recorded at 4.2, 30, and 100 K (Figure 2a–c) confirmed the presence of **3** of low-spin (S = 1) iron(IV).[23]

Addition at −70 °C of 1-MeIm in excess to a solution of **3** resulted in the formation of a second red species **4** with a visible spectrum (Figure 1) almost identical with that known for [Fe(=O)(1-MeIm)(TPP)][22] (λ_{max} = 426, 560, 590 nm). The Mössbauer spectrum (H^{ext} = 0 T) recorded at 4.2 K showed parameters (δ (relative to α-Fe at room temperature) = 0.109, ΔE_Q = 1.372, Γ = 0.315 (±0.007) mm s^{-1}) practically identical with those reported for met-Mb–H_2O_2 and for compound II of Japanese radish peroxidase[26] and very similar to those known for [Fe(=O)(1-MeIm)TPP][24] and other iron(IV)–oxo–porphyrin derivatives.[25-27] These spectroscopical properties are compatible with an iron(IV)–oxo–porphyrin formulation for **3** and **4**. Furthermore, preliminary X-ray studies[28] at −100 °C on small crystals,

(14) McCandlish, E.; Miksztal, A. R.; Nappa, M.; Sprenger, A. Q.; Valentine, J. S.; Stong, J. D.; Spiro, T. G. *J. Am. Chem. Soc.* **1980**, *102*, 4268–4271.

(15) Reed, C. A. *Adv. Chem. Ser.* **1982**, *No. 201*.

(16) It was shown recently that peroxo–iron(III) porphyrin derivatives can be obtained by electrochemical reduction at −25 °C of ferrous porphyrin dioxygen adducts; see: Welborn, C. H.; Dolphin, D.; James, B. R. *J. Am. Chem. Soc.* **1981**, *103*, 2869–2871.

(17) The η^2 triangular structure of the FeO_2 moiety has been confirmed by EXAFS: Fischer, J.; Friant, P.; Goulon, J.; Momenteau, M.; Ricard, L.; Schappacher, M.; Weiss, R. *Nouv. J. Chim.*, in press.

(18) **3** can also be obtained by reaction of CO_2 with [FeOOTP(piv)P]$^-$ prepared by the methods described in ref 14 and 15 for [FeOO(TPP)]$^-$ and [FeOO(OEP)]$^-$ or reduction of the O_2 adduct [Fe(O_2)(THF)TP(piv)P] (**2**) with [Na$^+$⊂222][t-BuS$^-$].

(19) Later transition-metal peroxo complexes react with carbon dioxide to form peroxymonocarbonate intermediates; see: Hayward, P. J.; Blake, D. M.; Wilkinson, G.; Nyman, C. J. *J. Am. Chem. Soc.* **1970**, *92*, 5873.

(20) Ebsworth, E. A. V.; Connor, J. A.; Turner, J. J. In "Comprehensive Inorganic Chemistry"; Pergamon Press: Oxford, 1973; Chapter 22, Vol. 2, pp 780.

(21) The 400-MHz ^{1}H NMR spectrum of the tetramesitylporphyrin TMP analogue of **3** (TMP) in TDF at −50 °C shows as in other iron(IV) species a resonance at a very high field (δ −36.4) and other resonances at δ 7.33 s (meta H), 2.97 s (ortho methyl), 2.81 s (para methyl); see ref 23, 24.

(22) Chin, D. H.; Lamar, G. N.; Balch, A. L. *J. Am. Chem. Soc.* **1980**, *102*, 4344–4350.

(23) Harami, T.; Maeda, Y.; Morita, Y.; Trautwein, A.; Gonser, U. *J. Chem. Phys.* **1977**, *67*, 1164–1169.

(24) Simmoneaux, G.; Scholtz, W. F.; Reed, C. A.; Lang, G. *Biochem. Biophys. Acta* **1982**, *716*, 1–7.

(25) Groves, J. T.; Haushalter, R. C.; Nakamura, M.; Nemo, T. E.; Evans, B. J. *J. Am. Chem. Soc.* **1981**, *103*, 2884–2886.

(26) Groves, J. T.; Quinn, R.; McMurray, T. J.; Lang, G.; Boso, B. *J. Chem. Soc., Chem. Commun.* **1984**, 1455–14569

(27) Hiller, W.; Strähle, J.; Datz, A.; Hanack, M.; Hatfield, W. E.; Ter Haar, L. W.; Gütlich, P. *J. Am. Chem. Soc.* **1984**, *106*, 329–335.

contaminated presumably by cocrystallization of an iron(III) material as shown by EPR spectroscopy, indicated the presence of a THF molecule bonded to iron as second axial ligand.

Hence, **3** is an iron(IV)–oxo–"picket-fence" porphyrin complex and **4** is the picket-fence porphyrin analogue of [Fe(=O)(1-MeIm)(TPP)] reported by Balch et al.[22]

The mechanism of formation of **3** is still unclear. A reactive monoperoxy carbonate intermediate forms presumably when carbon dioxide reacts with the peroxo–iron(III) derivative **2**, but such an intermediate could not be detected. Moreover, the overall stoichiometry of the carbon dioxide reaction with **2** has, so far, not been established.

Acknowledgment. We thank Dr. L. Ricard (Strasbourg) and Prof. R. Guilard (Dijon) for helpful comments.

(28) Crystallization of **3** at −40 °C yielded small crystals, all contaminated by an iron(III) bromo picket-fence porphyrin, presumably by cocrystallization of two almost identical molecular entities. X-ray studies[29] at −100 °C indicated that these crystals belonged to the monoclinic system with a = 18.661 (8) Å, b = 19.030 (8) Å, c = 18.245 (7) Å, β = 90.99 (2)°, space group $C2/c$, Z = 4. Preliminary results obtained by anisotropic refinements of all non-hydrogen atoms (present R_1 value = 0.075) indicated the presence of an iron "picket-fence" porphyrin with a THF molecule bonded to the metal on the nonprotected side of the ring. Approximately 85% of the electron density located inside the molecular cavity of the porphyrin could correspond to an oxygen atom with an Fe–O distance of 1.604 (19) Å, the remaining 15% of the density corresponds probably to a bromide ion with Fe–Br = 2.355 (8) Å. The other distances found are $\overline{\text{Fe–Np}}$ = 2.005 (8), Fe–O(THF) = 2.269 (10) and Fe–C_t = 0.13 Å. These Fe=O and Fe–Np distances are identical with those derived by preliminary EXAFS studies at −100 °C of several iron(IV)–oxo–porphyrin derivatives.[30]

(29) Schappacher, M.; Ricard, L.; Weiss, R., unpublished results.
(30) Penner-Hahn, J. E.; McMurray, T. J.; Renner, M.; Latos-Grazinsky, L.; Smith-Eble, K.; Davis, I. M.; Balch, A. L.; Groves, J. T.; Dawson, J. H.; Hodgson, K. O. *J. Biol. Chem.* **1983**, 12781–12784.

The Au/GaPc-Cl/Ferri,Ferrocyanide/GaPc-Cl/Pt Photoelectrochemical Cell

William J. Buttner,[‡] Peter C. Rieke,[†] and Neal R. Armstrong*

University of Arizona, Department of Chemistry Tucson, Arizona 85721

Received November 2, 1984

A photochemical cell consisting of a thin film photoconductor (PC) backed by a conductive metal substrate (M) and in contact with an electrolyte solution (R,Ox) (M/PC/R,Ox) develops an open-circuit photopotential which is limited in magnitude by the difference in Fermi potential (work function) of M and the Fermi potential of an electron in the redox couple (represented by the $E^{\circ\prime}$).[1-3] Analogous behavior is observed in solid-state photovoltaics (using SiH_x or organic thin films) where the electrolyte is replaced by a metal counter electrode.[4,5] We have taken advantage of this fact to construct a photoelectrochemical cell

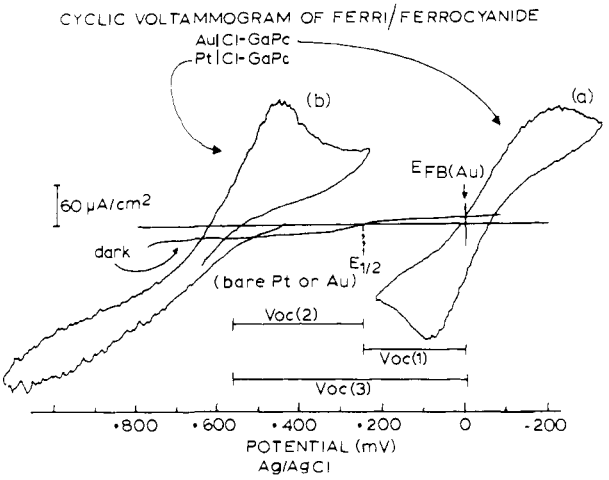

Figure 1. Cyclic voltammograms (scan rate = 50 mV/s, potentials measured relative to Ag/AgCl) for (a) Au/GaPc-Cl and (b) Pt/GaPc-Cl in the dark and in the light in contact with a 1 mM $K_4Fe(CN)_6$, 1 mM $K_3Fe(CN)_6$, 0.4 M KHPthalate, pH = 4 solution.

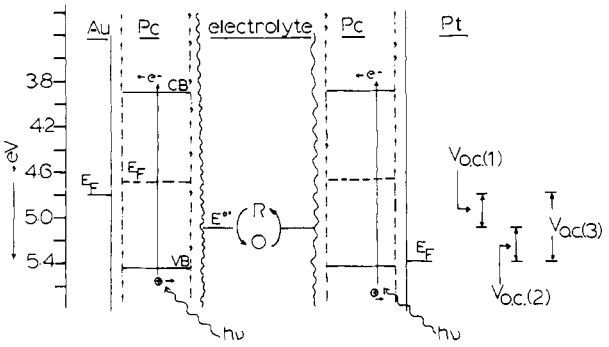

Figure 2. Band diagram for the Au/GaPc-Cl/ferri,ferrocyanide/GaPc-Cl/Pt photovoltaic cell at the flatband condition. $V_{oc}(1)$, $V_{oc}(2)$, and $V_{oc}(3)$ are as seen in Figure 1.

based upon vacuum-deposited (chlorogallium phthalocyanine, GaPc-Cl) thin films in contact with *two* metals of different work function (a Au/GaPc-Cl anode and a Pt/GaPc-Cl cathode) and a redox electrolyte which acts as the contacting phase (and electron shuttle) between the photoanode and photocathode. The details of photoconductor preparation on optically transparent metal substrates and the photoelectrochemical characterization are as described previously.[2]

Chlorogallium phthalocyanine (GaPc-Cl) films of 0.7–1.0 μm thickness on thin (300 Å) gold films on a polymer substrate produce sizable *positive* and *negative* photopotentials in contact with aqueous redox couples.[2,3] The current–voltage curves under illumination of the Au/GaPc-Cl/R,Ox system are displaced to the potential of zero net current flow as dictated by the apparent flatband potential (E_{FB}) for the Au/GaPc-Cl/R,Ox system (see Figure 1a for the ferri, ferrocyanide redox couple). A linear correlation between these potential shifts (V_{oc} (1) in Figure 1) and the $E^{\circ\prime}$ of the redox couple, for values of $E^{\circ\prime}$ from −0.6 to +0.9 V (vs. Ag/AgCl), is observed.[2] The effective Fermi energy of these GaPc-Cl films before contact with metal or electrolyte is at least 0.7 V above the valence band edge.[3] Other phthalocyanine films have exhibited a more p-type character.[6,7]

† Present address: Los Alamos National Laboratories.
‡ Present address: Argonne National Laboratories.

(1) (a) Calabrese, G. S.; Lin, M.-S.; Dresner, J.; Wrighton, M. S. *J. Am. Chem. Soc.* **1982**, *104*, 2412. (b) Harrison, D. J.; Calabrese, G. S.; Ricco, A. J.; Dresner, J.; Wrighton, M. S. *J. Am. Chem. Soc.* **1983**, *105*, 4212.
(2) Rieke, P. C.; Armstrong, N. R. *J. Am. Chem. Soc.* **1984**, *106*, 47.
(3) (a) Buttner, W. J.; Rieke, P. C.; Armstrong, N. R. *J. Phys. Chem.* **1985**, *89*, 1116. (b) Rieke, P. C.; Armstrong, N. R. *J. Phys. Chem.* **1985**, *89*, 1121.
(4) Carlson, D. E.; Wronski, C. R. *Top. Appl. Phys.* **1979**, *36*, 287–329.
(5) (a) Morel, D. L.; Stogrym, E. L.; Ghosh, A. K.; Feng, T.; Purwin, P. E.; Shaw, R. F.; Fishman, C.; Bird, G. R.; Piechowski, A. P. *J. Phys. Chem.* **1984**, *88*, 923. (b) Piechowski, A. P.; Bird, G. R.; Morel, D. L.; Stogryn, E. L. *J. Phys. Chem.* **1984**, *88*, 934. (c) Morel, D. L.; Ghosh, A. K.; Feng, T.; Stogryn, E. L.; Purwin, P. E.; Shaw, R. F.; Fishman, C. *Appl. Phys. Lett.* *32*, **1978**, 495. (d) Ghosh, A. K.; Feng, T. *J. Appl. Phys.* **1978**, *49*, 5982. (e) Chamberlin, G. A. *J. Appl. Phys.* **1978**, *53*, 6262. (f) Tang, C. W.; Albrecht, A. *J. Chem. Phys.* **1975**, *62*, *63*, 953. (g) Hor, A. M.; Loutfy, R. O.; Hsiao, C. K. *Appl. Phys. Lett.* **1983**, *42*, 165. (h) Loutfy, R. O. *J. Phys. Chem.* **1982**, *86*, 3302. (i) Loutfy, R. O., Sharp, J. H. *J. Chem. Phys.* **1979**, *71*, 1211.
(6) Klofta, T.; Linkous, C.; Armstrong, N. R. *J. Electroanal. Chem.*, in press.
(7) (a) Fan, F. F.; Faulkner, L. R. *J. Am. Chem. Soc.* **1979**, *101*, 4779. (b) Fan, F. F.; Faulkner, L. R. *J. Chem. Phys.* **1978**, *69*, 3334. (c) Fan, F. F., Reichman, B.; Bard, A. J. *J. Am. Chem. Soc.* **1980**, *102*, 1488. (d) Tachikawa, H.; Faulkner, L. R. *J. Am. Chem. Soc.* **1978**, *100*, 4379. (e) Leempoel, P.; Fan, F. F.; Bard, A. J. *J. Phys. Chem.* **1983**, *87*, 2948. (f) Fan, F. F.; Bard, A. J. *J. Am. Chem. Soc.* **1979**, *101*, 6139. (g) Jaeger, C. D.; Fan, F. F.; Bard, A. J. *J. Am. Chem. Soc.* **1980**, *102*, 2592. (h) Giraudeau A.; Fan, F. F.; Bard, A. J. *J. Am. Chem. Soc.* **1980**, *102*, 5138. Hor, A. M.; Loutfy, R. O. *Can. J. Chem.* **1983**, *61*, 901.

0002-7863/85/1507-3738$01.50/0 © 1985 American Chemical Society